

FRIKE – Automated Cone Laying Machine

FALCON ACLM

TABLE OF CONTENTS

01 Problem analysis

02 Goal

03 Solution

04 Characteristics

05 Models

06 Technical data

07 Carrier vehicle

08 Assembly options

09 Accessories

10 Service & Support

11 References

12 Application in Germany

Verkehrstechnik
Technique du trafic
Traffic Control Engineering

fr!ke

01 Problem analysis
02 Goal
03 Solution
04 Characteristics
05 Models
06 Technical data
07 Carrier vehicle
08 Assembly options
09 Accessories
10 Service & Support
11 References
12 Application in Germany



PROBLEM ANALYSIS

- Situation: Placement and Collection of Traffic Cones
  - Typically manual or semi-automatic process
- Challenges (**Safety**):
  - **Fatal risks;** zero tolerance for accidents
  - Moving traffic
  - Distracted road users
  - Excessive speeds
  - Workers' focus on tasks, not necessarily on traffic
  - Human fatigue leading to slower response times, whereas machines do not tire
  - SQ from ASR A5.2 requirements cannot be met under current conditions

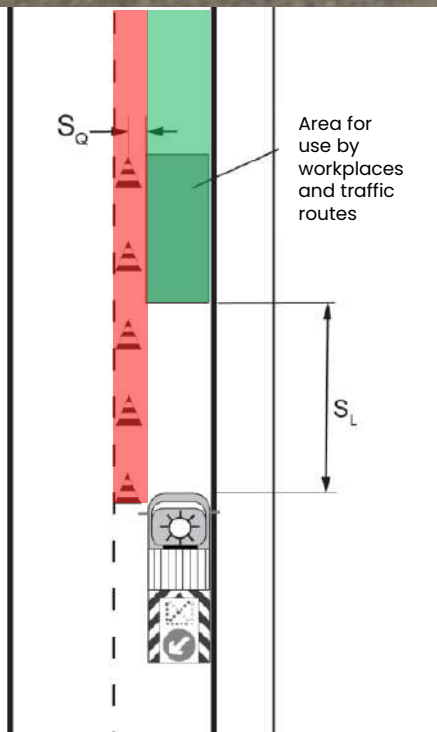

01 Problem analysis
02 Goal
03 Solution
04 Characteristics
05 Models
06 Technical data
07 Carrier vehicle
08 Assembly options
09 Accessories
10 Service & Support
11 References
12 Application in Germany



ASR A5.2

- Section 4.3; (1)
  - « Except for the setup and dismantling of traffic control devices, no workplaces or traffic paths are allowed within the lateral safety distance (SQ).»
    - Working within the SQ is permitted, but only for a short duration. However, this should be avoided whenever possible.
- Section 4.3; (3)
  - «If the minimum dimensions from Tables 1 and 2 cannot be met, protective measures must be established as a result of a risk assessment»
    - **One protective measure is the traffic cone setter.**

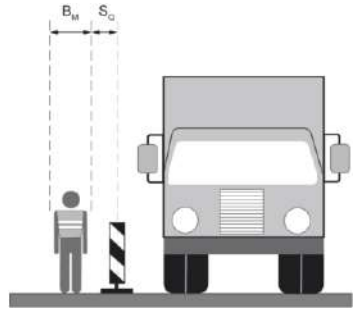

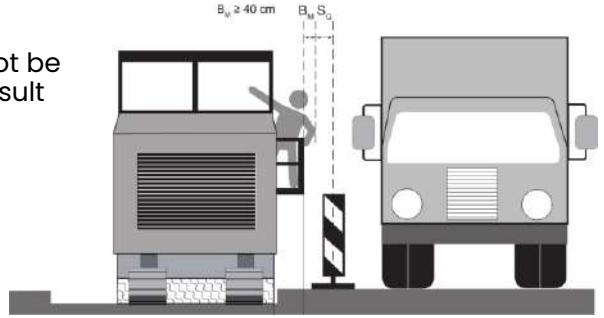

01 Problem analysis
02 Goal
03 Solution
04 Characteristics
05 Models
06 Technical data
07 Carrier vehicle
08 Assembly options
09 Accessories
10 Service & Support
11 References
12 Application in Germany



“Please take care of our dad!”

01 Problem analysis
02 Goal
03 Solution
04 Characteristics
05 Models
06 Technical data
07 Carrier vehicle
08 Assembly options
09 Accessories
10 Service & Support
11 References
12 Application in Germany



“Please take care of our dad!”

- Enhancing **Workplace Safety** for Operational Personnel
  - Through the fully automated traffic cone setter itself
  - During the placement and retrieval of traffic cones
- **Maximum Traffic Safety**
  - No disruption to traffic
  - The machine operates smoothly and steadily. Incoming traffic is not surprised or unsettled by abrupt or rapid movements
  - The traffic cone is gently pushed to the centerline
- Lower **Operating Costs**
- **Focused effort**
  - Reduced time spent on signaling
  - More time for essential tasks: maintenance work

→ **«Overall, safer working conditions for both parties.»**

Verkehrstechnik
Technique du trafic
Traffic Control Engineering

01 Problem analysis
02 Goal
03 Solution
04 Characteristics
05 Models
06 Technical data
07 Carrier vehicle
08 Assembly options
09 Accessories
10 Service & Support
11 References
12 Application in Germany



SOLUTION

- Fully automated operation
- All processes are automatic and fully mechanized
- A single operator can carry out a lane closure safely, efficiently, and cost-effectively
- Personnel costs can be optimized while increasing safety simultaneously
- Traffic cones can be placed and removed fully automatically across the entire width of the lane, allowing lane removal to also be fully automated

Verkehrstechnik
Technique du trafic
Traffic Control Engineering

01 Problem analysis
02 Goal
03 Solution
04 Characteristics
05 Models
06 Technical data
07 Carrier vehicle
08 Assembly options
09 Accessories
10 Service & Support
11 References
12 Application in Germany



01 Problem analysis
02 Goal
03 Solution
04 Characteristics
05 Models
06 Technical data
07 Carrier vehicle
08 Assembly options
09 Accessories
10 Service & Support
11 References
12 Application in Germany

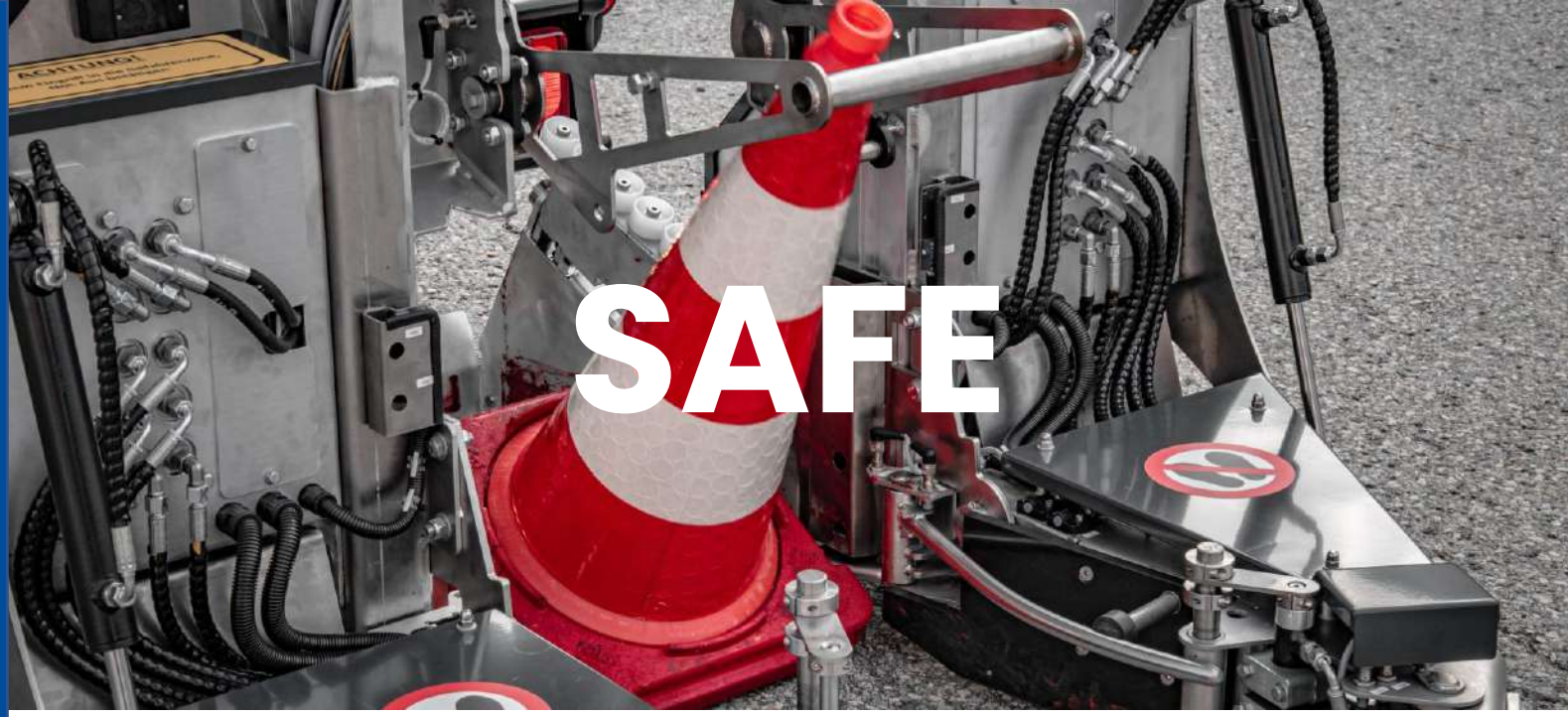

- No exposed or moving parts outside the vehicle profile in the traffic area, ensuring maximum traffic and workplace safety
- Maximum occupational safety, no need to leave the cab
  - Value of a statistical life (WSL) = €1.65 million*
- LED headlights and infrared imaging for nighttime use

Quelle: Technische Universität Darmstadt, Hannes Spengler, August 2004

Verkehrstechnik
Technique du trafic
Traffic Control Engineering
fr!ke

01 Problem analysis
02 Goal
03 Solution
04 Characteristics
05 Models
06 Technical data
07 Carrier vehicle
08 Assembly options
09 Accessories
10 Service & Support
11 References
12 Application in Germany



- Ø 8 traffic cones per minute (including reloading interruptions)
- Rule of thumb: Speed [km/h] = distance [m] / 2
- One of the fastest fully automatic traffic cone setters on the market

01 Problem analysis
02 Goal
03 Solution
04 Characteristics
05 Models
06 Technical data
07 Carrier vehicle
08 Assembly options
09 Accessories
10 Service & Support
11 References
12 Application in Germany



SIMPLE

- Operation via 12.1" touchscreen control panel in the cabin
- Visual process monitoring with 4 cameras
- The most commonly used aid is still the side mirror
- Fully automatic operation with just one operator

Verkehrstechnik
Technique du trafic
Traffic Control Engineering
fr!ke

01 Problem analysis
02 Goal
03 Solution
04 Characteristics
05 Models
06 Technical data
07 Carrier vehicle
08 Assembly options
09 Accessories
10 Service & Support
11 References
12 Application in Germany

Operation

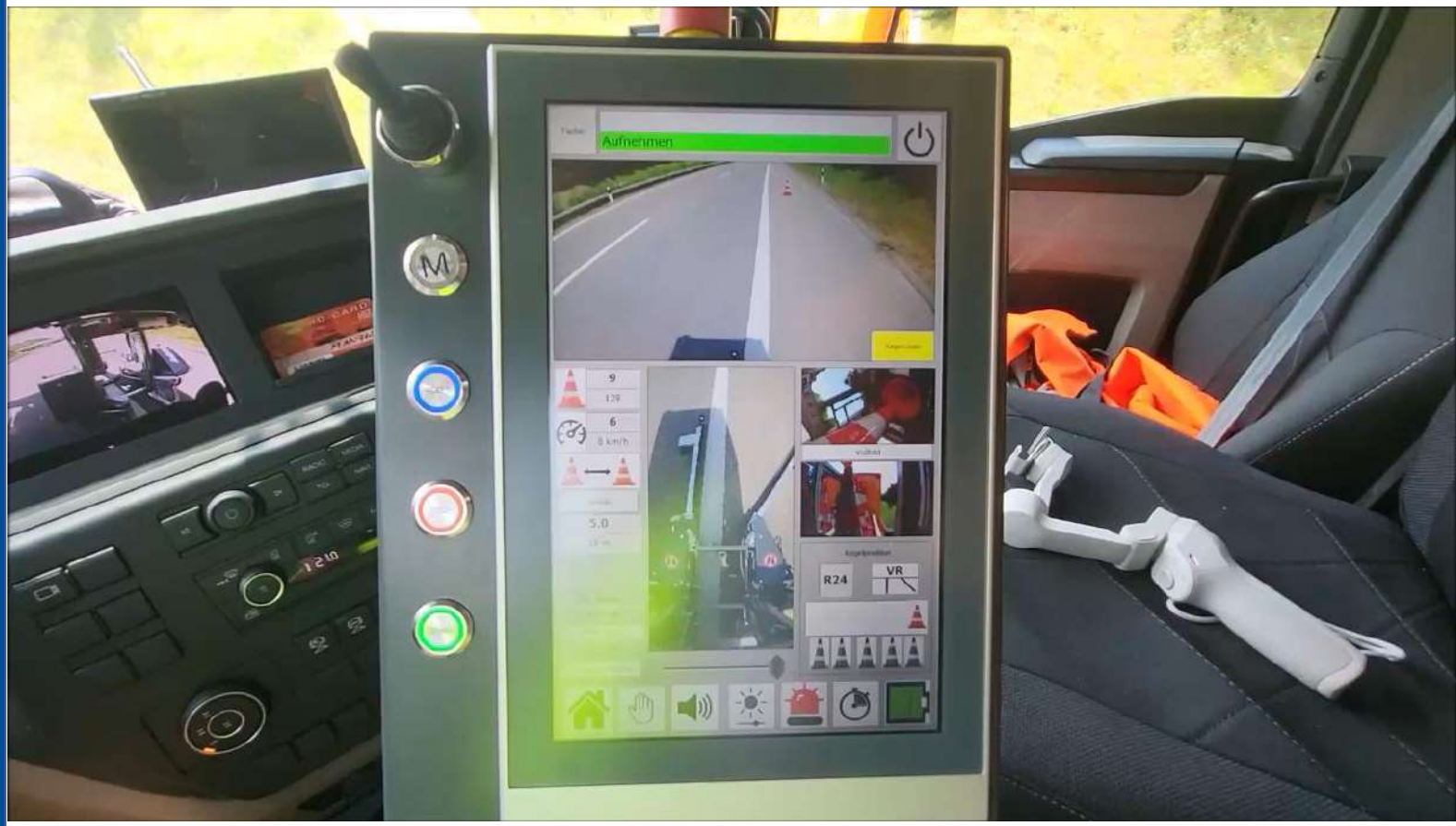

Verkehrstechnik
Technique du trafic
Traffic Control Engineering
fr!ke

01 Problem analysis
02 Goal
03 Solution
04 Characteristics
05 Models
06 Technical data
07 Carrier vehicle
08 Assembly options
09 Accessories
10 Service & Support
11 References
12 Application in Germany



FLEXIBEL

- Different Working Modes
  - Set
  - Pick up
  - Track reduction
  - Deactivation of individual magazines in very narrow conditions
- 51 pre-programmed cone positions over a track width of 3,500 mm
- Individual signaling
- Flexible mounting on a small truck
  - Interface: 6x mounting screws; 3x control panel plugs
- Floating support structure, ideal for use on uneven road surfaces and varying installation heights

Verkehrstechnik
Technique du trafic
Traffic Control Engineering
fr!ke

01 Problem analysis
02 Goal
03 Solution
04 Characteristics
05 Models
06 Technical data
07 Carrier vehicle
08 Assembly options
09 Accessories
10 Service & Support
11 References
12 Application in Germany



ROBUST

- Can be used in all weather conditions (except during heavy snowfall)
- The only machine to have passed the “National Highways” entry endurance tests in England
  - 12,500 traffic cones placed on the airfield
  - 12,500 traffic cones in 40 night missions
- 3rd generation
- Developed and tested since 2015, with experience from over 150,000 deployed and collected traffic cones across hundreds of kilometers of lane closures

01 Problem analysis
02 Goal
03 Solution
04 Characteristics
05 Models
06 Technical data
07 Carrier vehicle
08 Assembly options
09 Accessories
10 Service & Support
11 References
12 Application in Germany

Models

	Number of traffic cones	Vehicle weight
Model XXS	85	5t
Model XS	170	5t
Model S	**255**	**7t**
Model M	357	10t – 12t
Model L	510	18t

Verkehrstechnik
Technique du trafic
Traffic Control Engineering
fr!ke

01 Problem analysis
02 Goal
03 Solution
04 Characteristics
05 Models
06 Technical data
07 Carrier vehicle
08 Assembly options
09 Accessories
10 Service & Support
11 References
12 Application in Germany

Technical Data
Model S

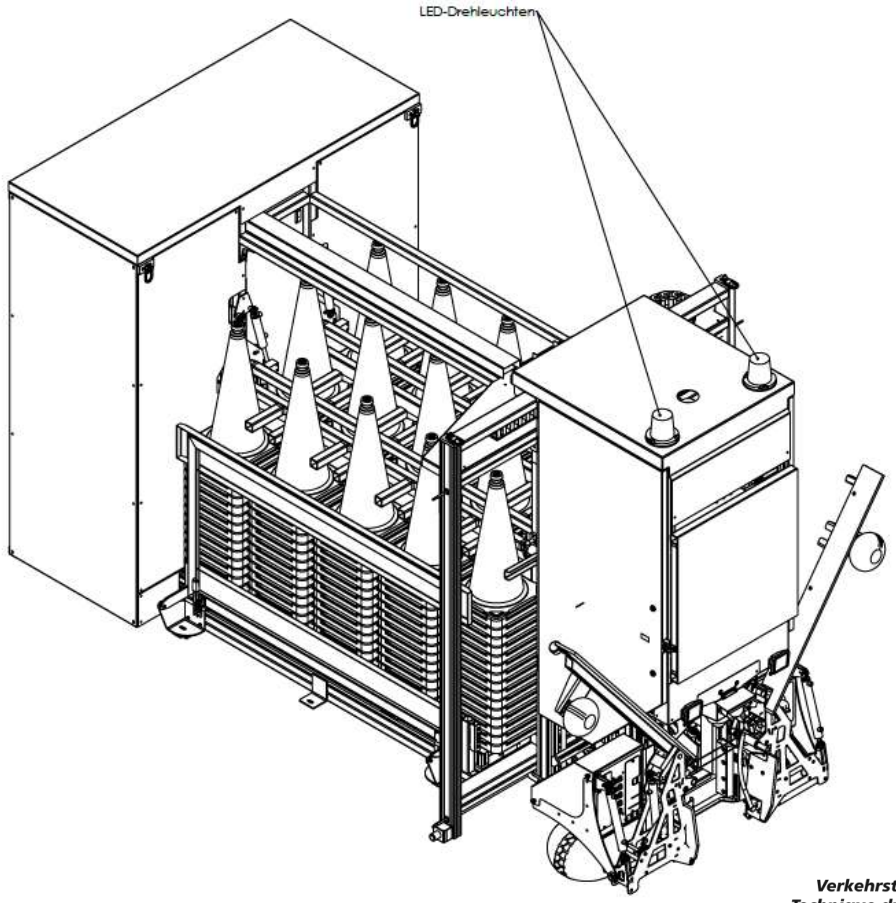

Verkehrstechnik
Technique du trafic
Traffic Control Engineering

01 Problem analysis
02 Goal
03 Solution
04 Characteristics
05 Models
06 Technical data
07 Carrier vehicle
08 Assembly options
09 Accessories
10 Service & Support
11 References
12 Application in Germany



TECHNICAL DATA

Dimensions (LxWxH):	4’208mm x 2’214mm x 2’521mm
Rear overhang:	1’146mm (Retractable on request)
Weight without traffic cones:	Ca. 2’070kg
Weight with traffic cones:	Ca. 3’498kg
Power supply Machine:	48VDC / 200Ah Machines Battery ($LiFePO_4$) Optional recharging function via the carrier vehicle
Operating time:	900 cycles = almost 2x put down & pick up all traffic cones

01 Problem analysis
02 Goal
03 Solution
04 Characteristics
05 Models
06 Technical data
07 Carrier vehicle
08 Assembly options
09 Accessories
10 Service & Support
11 References
12 Application in Germany



Discard:	8 Cones/Minute
Pick up:	7 Cones/Minute
Average speed:(including reload interruption)	18m ~ 8.6km/h 36m ~ 17.3km/h 50m ~ 24.0km/h Rule: Distance / 2

- Distance between traffic cones can be freely adjusted, ranging from 3m to 100m
- Automatic triggering based on the vehicle's speedometer signal
- Manual triggering possible at any time (override priority)

01 Problem analysis
02 Goal
03 Solution
04 Characteristics
05 Models
06 Technical data
07 Carrier vehicle
08 Assembly options
09 Accessories
10 Service & Support
11 References
12 Application in Germany

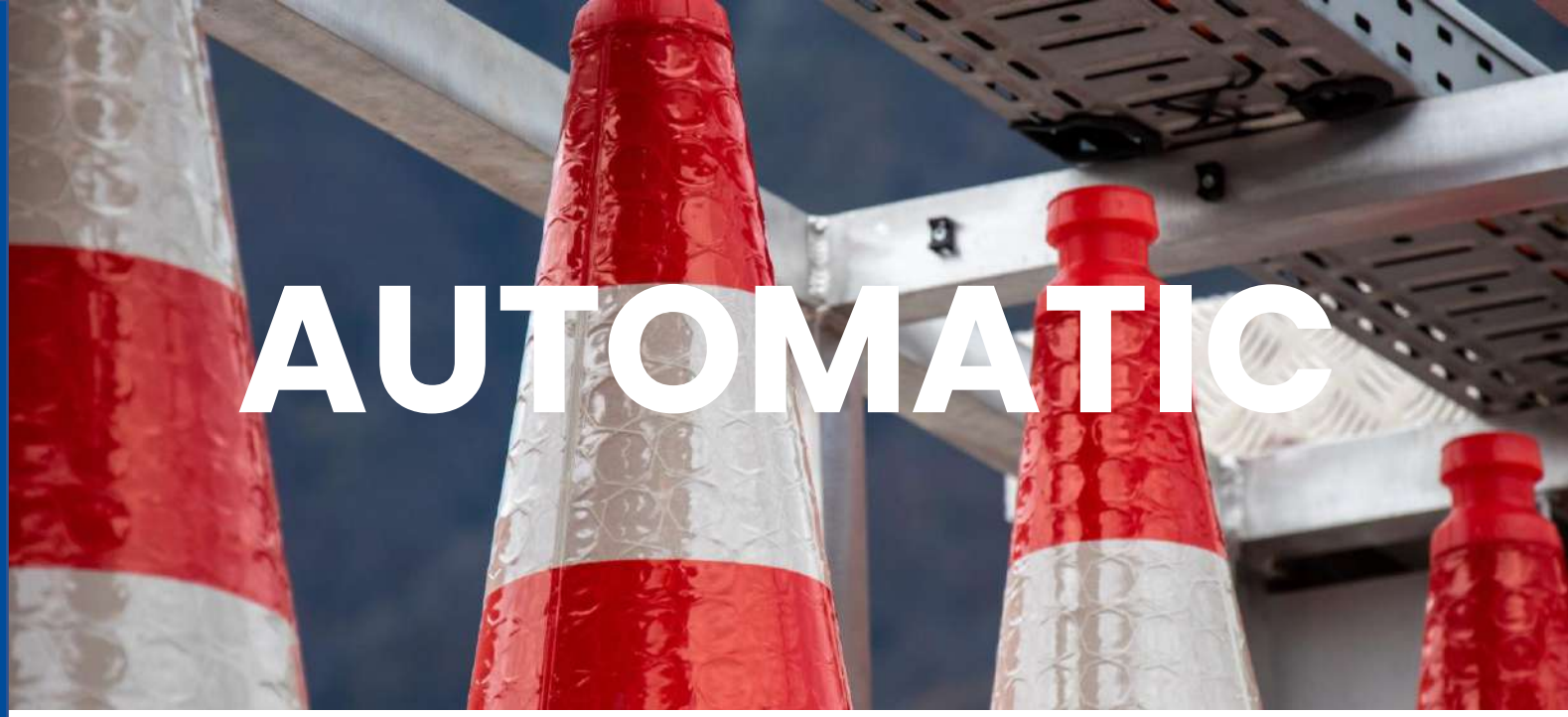

AUTOMATIC

- Automatic tracking of traffic cones
- The machine manages the magazine independently
- Automatic reloading mode
  - Reloading from the outside into the central magazine (manual reloading)
- The magazine can be deactivated
  - In narrow conditions such as tunnels etc.
  - Does not reload close to the flow of traffic

01 Problem analysis
02 Goal
03 Solution
04 Characteristics
05 Models
06 Technical data
07 Carrier vehicle
08 Assembly options
09 Accessories
10 Service & Support
11 References
12 Application in Germany

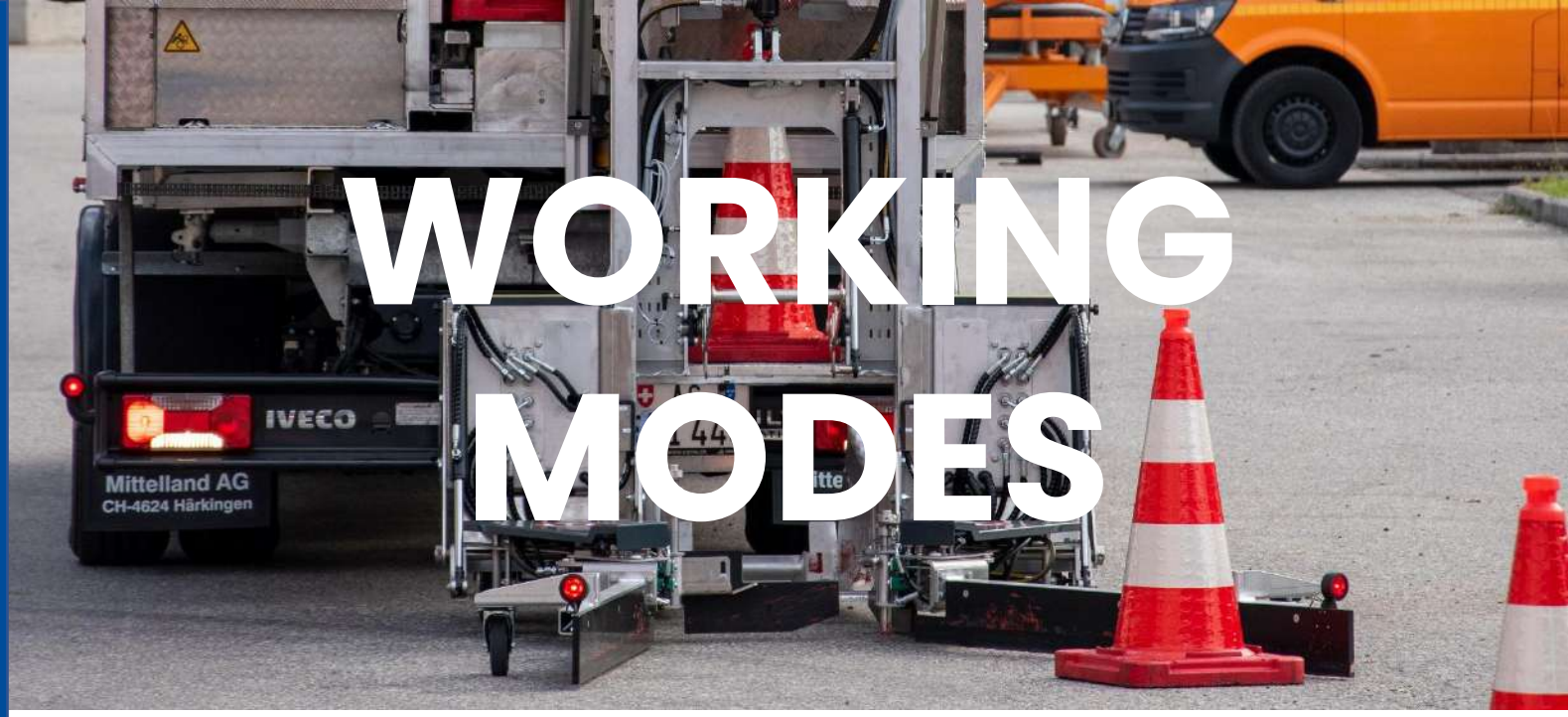

WORKING MODES

- Fully automatic placement of traffic cones according to the defined distance when driving forwards
- Continuous collection of traffic cones when reversing within the secured area in accordance with VSS/RSA
- Manual individual activation
- Fully automatic placement and collection of traffic cones when the lane is reduced from left to right or vice versa

Verkehrstechnik
Technique du trafic
Traffic Control Engineering
fr!ke

01 Problem analysis
02 Goal
03 Solution
04 Characteristics
05 Models
06 Technical data
07 Carrier vehicle
08 Assembly options
09 Accessories
10 Service & Support
11 References
12 Application in Germany

TL-Cone
FALCON 75

Dimension Base (LxW):	400mm x 400mm
Height:	773mm
Weight:	5.6kg
Weight category:	III / W3
Film type:	B (equivalent to RA2B / HIG)
Stack division:	55mm
Standards:	DIN EN 13422 BASt TL-Cone (02 3S 05) VSS 40 876
Advantages:	• Maximum stability • No sticking due to centering ring



Verkehrstechnik
Technique du trafic
Traffic Control Engineering
fr!ke

01 Problem analysis
02 Goal
03 Solution
04 Characteristics
05 Models
06 Technical data
07 Carrier vehicle
08 Assembly options
09 Accessories
10 Service & Support
11 References
12 Application in Germany



CARRIER VEHICLE

- Assembly Height: 900mm - 1,300mm (lower bridge heights possible by arrangement)
- Total Weight: Minimum 7t
- Available Payload: Minimum 3.5t
- Largest Possible Center Distance
- For Bridge Installation: Minimum 2,000m wide bridge
- Loading Area: Minimum 3,700mm long (access to the technical zone from the front)

Verkehrstechnik
Technique du trafic
Traffic Control Engineering
fr!ke

01 Problem analysis
02 Goal
03 Solution
04 Characteristics
05 Models
06 Technical data
07 Carrier vehicle
08 Assembly options
09 Accessories
10 Service & Support
11 References
12 Application in Germany

Carrier vehicle

Examples







Description	**MAN TGL 7.160 4x2 BL CH**	**Mitsubishi FUSO Canter 7C18AMT 4x2**	**Iveco Daily 70C21HA8**
Main wheel base:	3’600mm	4’300mm	3’750mm – 5’100mm
Overall weight:	7’500kg	7’490kg	7’200kg
Max. payload:	3’648kg	4’713kg	4’650kg
Front-axle load:	3’400kg	3’100kg	2’500kg
Rear-axle load:	5’200kg	5’990kg	5’350kg

Verkehrstechnik
Technique du trafic
Traffic Control Engineering
fr!ke

01 Problem analysis
02 Goal
03 Solution
04 Characteristics
05 Models
06 Technical data
07 Carrier vehicle
08 Assembly options
09 Accessories
10 Service & Support
11 References
12 Application in Germany

Assembly options



Bolted or lashed to the bridge as a payload



Permanently installed directly on chassis with pneumatic underride guard



Auf On tipper body / swap body / Wechselbrücke



Hook device

Verkehrstechnik
Technique du trafic
Traffic Control Engineering
fr!ke

Vehicle combination with trailer

01 Problem analysis
02 Goal
03 Solution
04 Characteristics
05 Models
06 Technical data
07 Carrier vehicle
08 Assembly options
09 Accessories
10 Service & Support
11 References
12 Application in Germany





Verkehrstechnik
Technique du trafic
Traffic Control Engineering
fr!ke

01 Problem analysis
02 Goal
03 Solution
04 Characteristics
05 Models
06 Technical data
07 Carrier vehicle
08 Assembly options
09 Accessories
10 Service & Support
11 References
12 Application in Germany

Accessories
Signalisation



Full matrix RGB LED-Panel (VMS)



LED-Panel (VMS) with pre-defined signs



Rear arrow board with and without wide-area warning strobe lights



Side warning strobe lights

01 Problem analysis
02 Goal
03 Solution
04 Characteristics
05 Models
06 Technical data
07 Carrier vehicle
08 Assembly options
09 Accessories
10 Service & Support
11 References
12 Application in Germany

Accessories
Tarpaulins/sliding top





- Particularly suitable for outdoor locations

Verkehrstechnik
Technique du trafic
Traffic Control Engineering
fr!ke

01 Problem analysis
02 Goal
03 Solution
04 Characteristics
05 Models
06 Technical data
07 Carrier vehicle
08 Assembly options
09 Accessories
10 Service & Support
11 References
12 Application in Germany

Accessories
Sliding frame

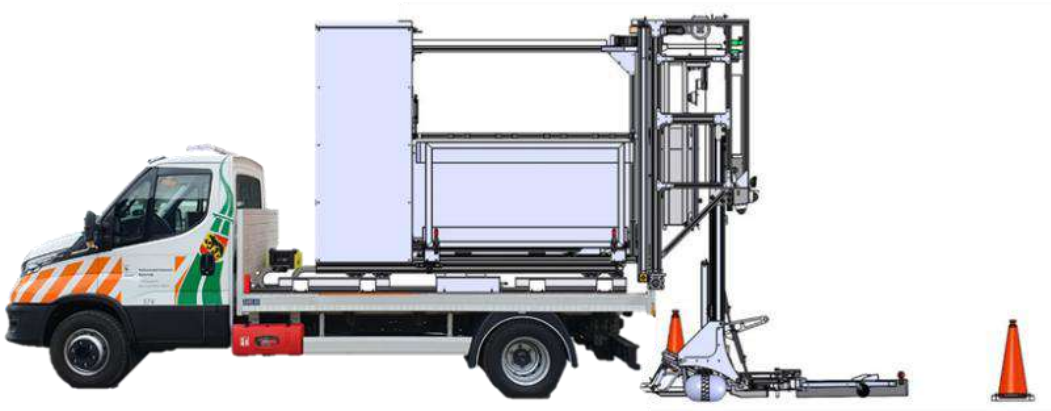

ACLM in Working Position with Sliding Frame
(Same position as without the sliding frame)



ACLM in Working Position with Sliding Frame
(Overhang only 500mm instead of 1150mm)

Verkehrstechnik
Technique du trafic
Traffic Control Engineering

01 Problem analysis
02 Goal
03 Solution
04 Characteristics
05 Models
06 Technical data
07 Carrier vehicle
08 Assembly options
09 Accessories
10 Service & Support
11 References
12 Application in Germany

Accessories
Hook device



01 Problem analysis
02 Goal
03 Solution
04 Characteristics
05 Models
06 Technical data
07 Carrier vehicle
08 Assembly options
09 Accessories
10 Service & Support
11 References
12 Application in Germany

Service & Support

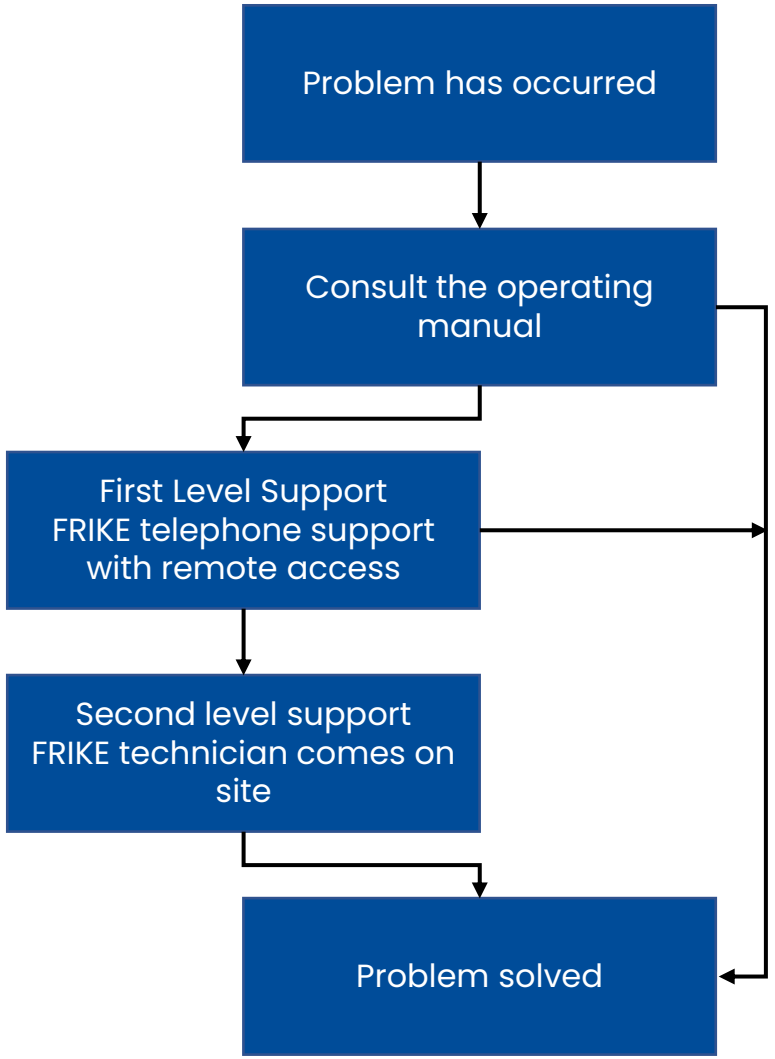

01 Problem analysis
02 Goal
03 Solution
04 Characteristics
05 Models
06 Technical data
07 Carrier vehicle
08 Assembly options
09 Accessories
10 Service & Support
11 References
12 Application in Germany

References

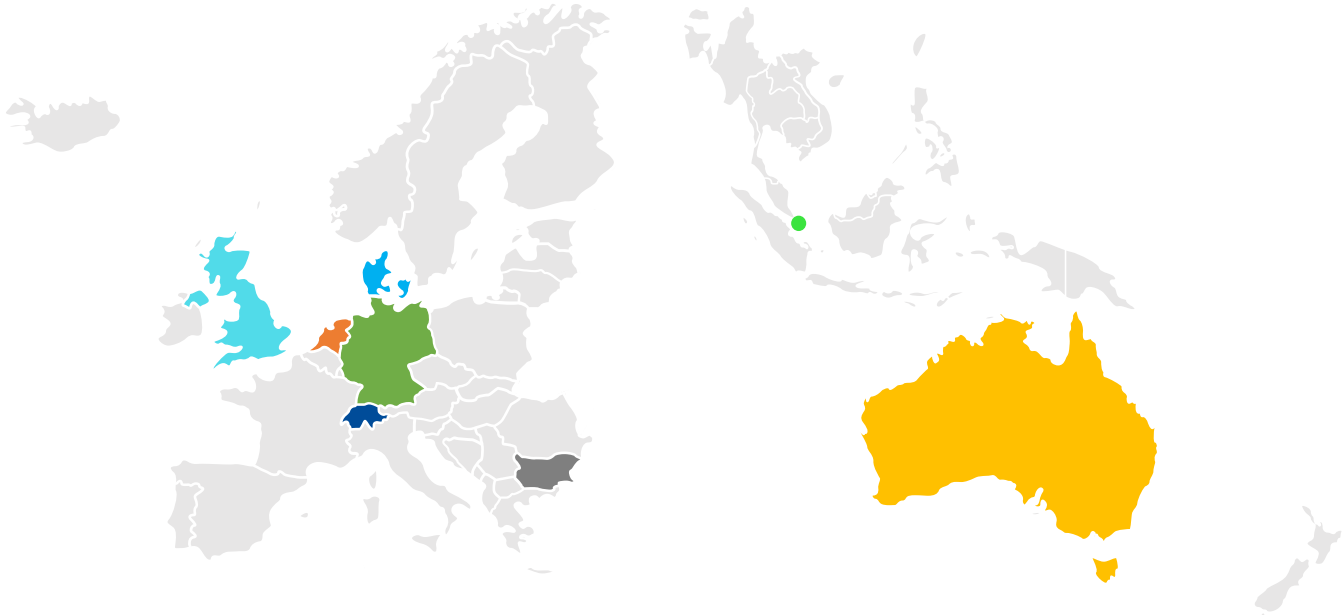

6	Switzerland	2	Denmark
5	UK	2	Bulgaria
1	Germany	1	Singapore
1	Netherlands	2	Australia

01 Problem analysis
02 Goal
03 Solution
04 Characteristics
05 Models
06 Technical data
07 Carrier vehicle
08 Assembly options
09 Accessories
10 Service & Support
11 References
12 Application in Germany



EXPERIENCE

- Over **350’000 traffic cones placed** worldwide
- Record machine: **60’000 traffic cones in one year with a single machine**
- With a cone spacing of 18m, this covers a **distance of 6’300 kilometers**
- This is equivalent to the distance from **Frankfurt to the New York**
- With each cone weighing 5kg, this totals **3’500 tons = (12pcs. A380 jumbo jets)**

01 Problem analysis
02 Goal
03 Solution
04 Characteristics
05 Models
06 Technical data
07 Carrier vehicle
08 Assembly options
09 Accessories
10 Service & Support
11 References
12 Application in Germany

SWITZERLAND



Kanton Bern
Canton de Berne

NSNW

Kanton Zürich
Baudirektion
Tiefbauamt

Verkehrstechnik
Technique du trafic
Traffic Control Engineering

fr!ke

01 Problem analysis
02 Goal
03 Solution
04 Characteristics
05 Models
06 Technical data
07 Carrier vehicle
08 Assembly options
09 Accessories
10 Service & Support
11 References
12 Application in Germany



UK



HIGHWAY CARE

Balfour Beatty

Verkehrstechnik
Technique du trafic
Traffic Control Engineering

fr!ke



SINGAPORE

01 Problem analysis
02 Goal
03 Solution
04 Characteristics
05 Models
06 Technical data
07 Carrier vehicle
08 Assembly options
09 Accessories
10 Service & Support
11 References
12 Application in Germany



SAMWOH
Innovate Sustainable

Verkehrstechnik
Technique du trafic
Traffic Control Engineering
fr!ke

01 Problem analysis
02 Goal
03 Solution
04 Characteristics
05 Models
06 Technical data
07 Carrier vehicle
08 Assembly options
09 Accessories
10 Service & Support
11 References
12 Application in Germany



NETHERLANDS



EBO VAN WEEL

wilchem milieu- en incidentmanagement

Verkehrstechnik
Technique du trafic
Traffic Control Engineering

fr!ke

01 Problem analysis
02 Goal
03 Solution
04 Characteristics
05 Models
06 Technical data
07 Carrier vehicle
08 Assembly options
09 Accessories
10 Service & Support
11 References
12 Application in Germany



DENMARK



terranor

Verkehrstechnik
Technique du trafic
Traffic Control Engineering

fr!ke



AUSTRALIA

01 Problem analysis
02 Goal
03 Solution
04 Characteristics
05 Models
06 Technical data
07 Carrier vehicle
08 Assembly options
09 Accessories
10 Service & Support
11 References
12 Application in Germany



A1 ROADLINES PTY LTD

Verkehrstechnik
Technique du trafic
Traffic Control Engineering
fr!ke



GERMANY

01 Problem analysis
02 Goal
03 Solution
04 Characteristics
05 Models
06 Technical data
07 Carrier vehicle
08 Assembly options
09 Accessories
10 Service & Support
11 References
12 Application in Germany

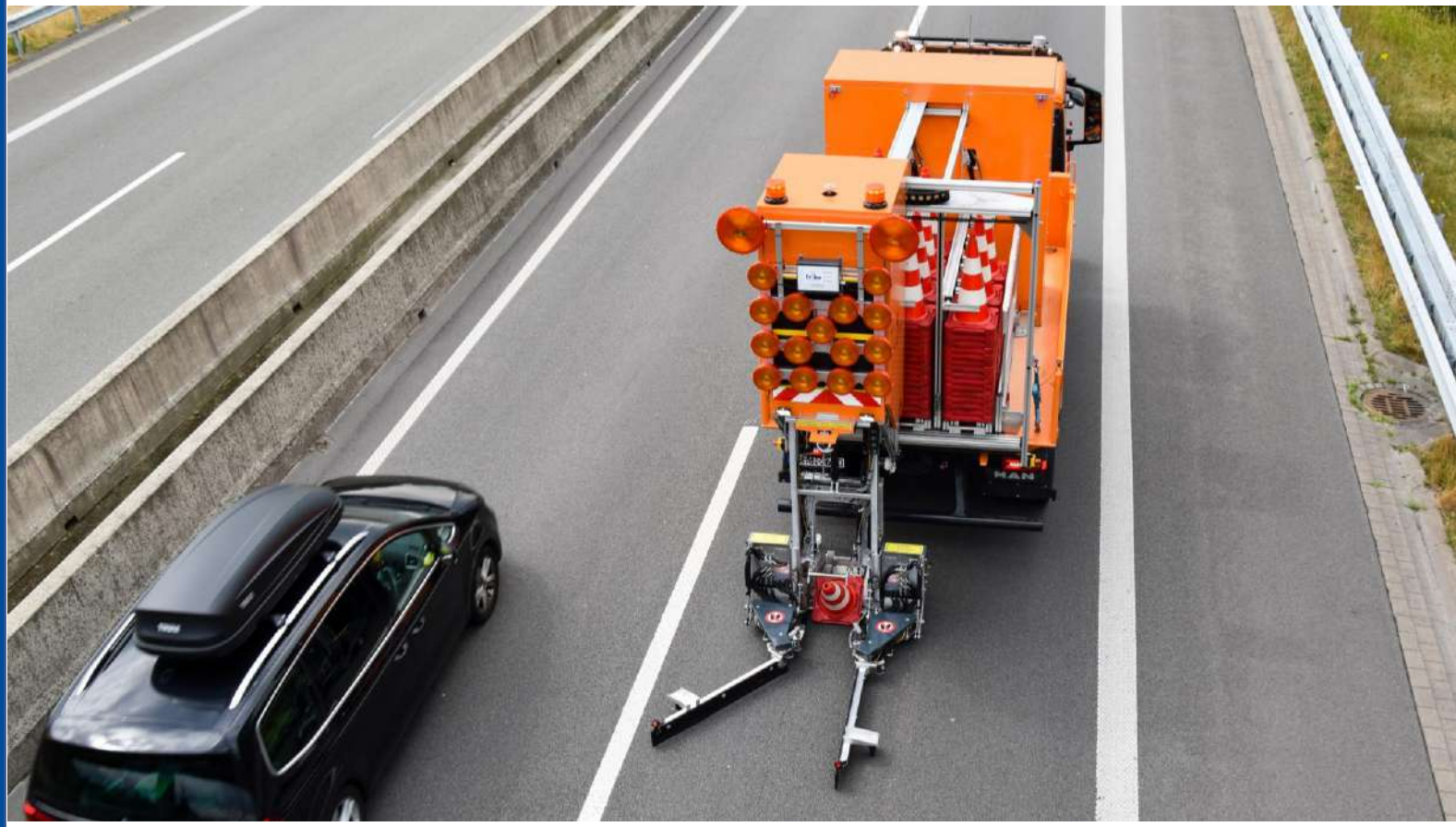

Zollernalbkreis

Verkehrstechnik
Technique du trafic
Traffic Control Engineering

fr!ke

Version 7, April 2026



Creating Safety Together

More Information

info@frike.ch

+41 44 869 23 44

www.frike.ch

Verkehrstechnik
Technique du trafic
Traffic Control Engineering

fr!ke